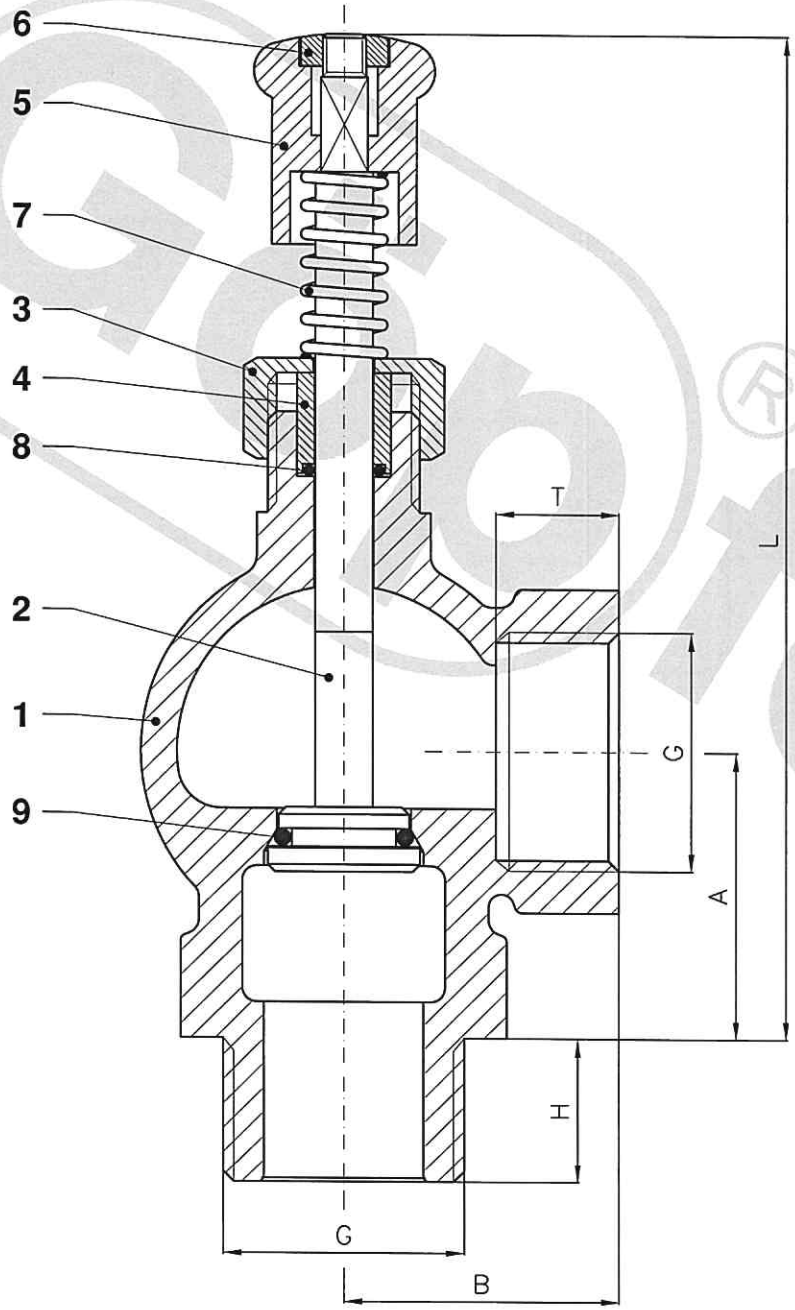

Pos.	Name	Material
1	Body	CuSn5Zn5Pb5–C
2	Stem	CuZn39Pb3
3	Gland nut	CuZn39Pb3
4	Gland	CuZn39Pb3
5	Push button	CuZn39Pb3
6	Screw	CuZn39Pb3
7	Spring	1.4310
8	O–Ring	NBR
9	O–Ring	NBR

DN	A	B	G	H	L	T	Weight kg~
15	31	34	BSP 1/2"	16	120	16	0,52
20	35	33	BSP 3/4"	18	128	16	0,64
25	40	45	BSP 1"	20	140	16	0,90

Scale: –:–

Tolerance DIN ISO 2768–m

Surface DIN ISO 1302 Row 2

Index	Revision	Date	Name

	Date	Name
Drawn	2.4.2009	Hauke Dreier
Check	2.4.2009	Lars Meyen
Norm		

Göpfert AG
ARMATURENFABRIK UND METALLGIESSEREI

Art.–No.

File–No. 70.161.04–08.DWG

Designation:

Self–closing valve DN 15–25 with push button

Drawing–No.: **70.161.04–08**